hibon

Bareshaft Blowers

S2H Two Lobe Series

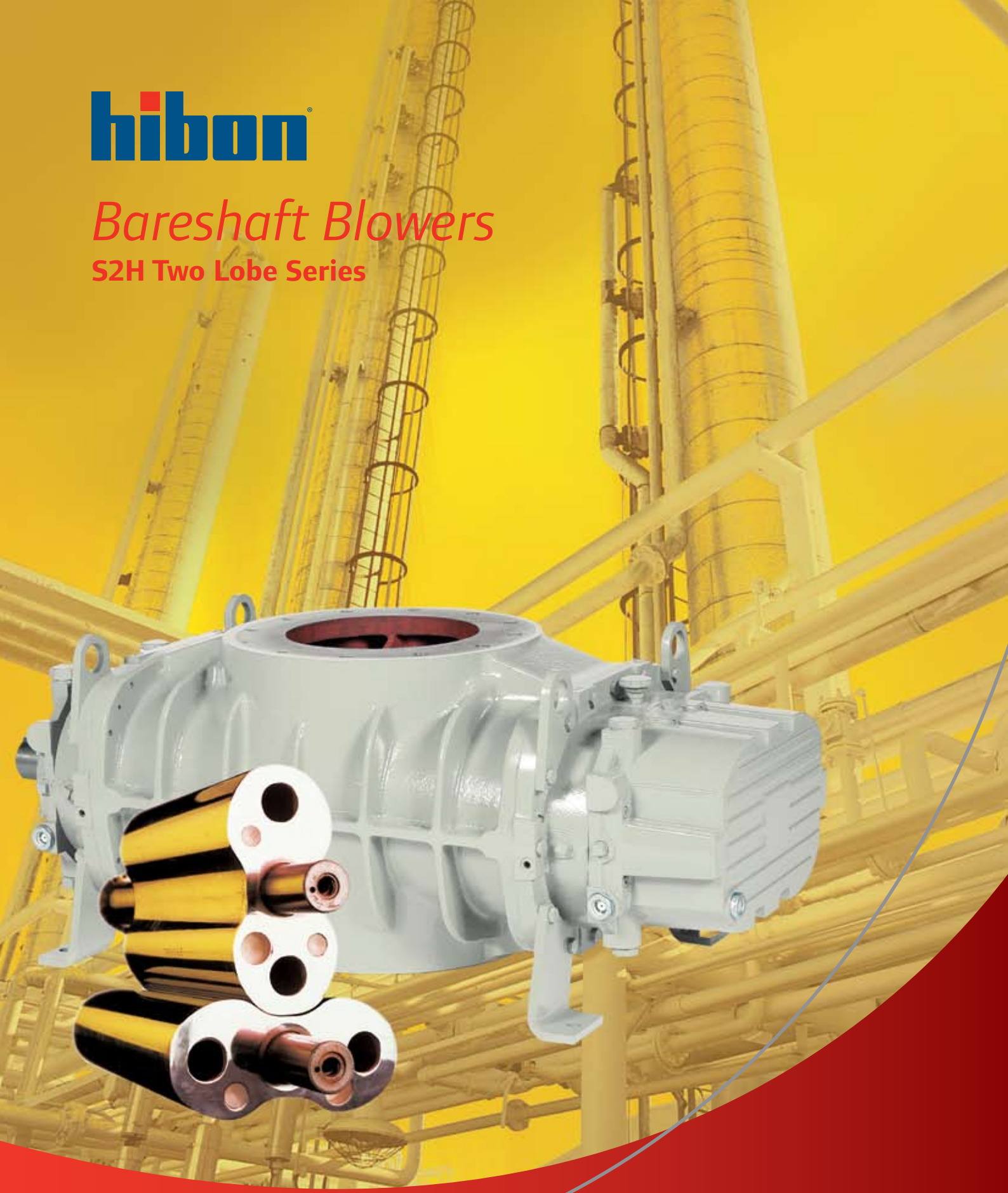

Ingersoll Rand
Industrial Technologies

S2H Series Blowers

Range

Range of positive displacement blowers featuring two lobes for use in compression and vacuum for air or neutral gases.

Pressure up to 1 bar (14.5 psig) – Vacuum up to 540 mbar (16 "Hg)

S2H Series flow range by model:

S2H 22 to S2H 52 (BSP), S2H 22N to S2H 53N (NPT)

From 15 m^3/h (9 cfm) to 1590 m^3/h (935 cfm)

S2H 62 to S2H 84 (NP 10)

From 1030 m^3/h (605 cfm) to 9500 m^3/h (5590 cfm)

Experience and know how

With almost a century of experience in the manufacture and the sale of rotary positive displacement blowers, Ingersoll Rand has a large range of two-lobe blowers specially designed to the meet the demanding requirements of standard air or neutral gas applications: efficiency, competitiveness, and robustness.

This know-how ensures that the entire range of standard blowers benefits from the largest technological developments, allowing the user to obtain an optimum solutions best suited to his needs..

Benefits

- High mechanical and volumetric efficiency
- Reliability in operation
- Air cooled, oil free operation
- Fast and easy maintenance
- Dynamically balanced impellers
- Detachable feet allow for vertical or horizontal flow
- Clockwise or counter-clockwise rotation
- Direct drive or V-belt drive available throughout the operating range

Application

Thousands of international installations of Ingersoll Rand blowers are proof of their reliability and strength, providing universal solutions in wide-ranging applications such as:

- Water treatment
- Pneumatic conveying
- Combustion Air
- Centralized Cleaning
- Fluidization
- Homogenization
- Gas Compression

Performance

S2H22 to S2H84

Model	Maximum Inlet Flow		Max. Differential pressure		Max. Vaccum	
	m^3/h	cfm	mbar	psig	mbar	"Hg
S2H22	120	70	830	12	500	15
S2H23	255	150	485	7	470	14
S2H31	235	140	1000	15	540	16
S2H32	330	200	825	12	500	15
S2H33	615	360	480	7	480	14
S2H41	330	200	1000	15	540	16
S2H42	600	350	700	10	540	16
S2H43	930	545	480	7	470	14
S2H51	500	280	1000	15	540	16
S2H52	910	530	900	13	540	16
S2H53	1590	935	500	7	470	14
S2H62	2580	1650	1000	15	470	14
S2H63	3780	2250	800	12	550	16
S2H64	5060	3040	600	9	540	16
S2H82	4400	2815	900	13	540	16
S2H83	7050	4255	750	11	540	16
S2H84	9500	5590	600	9	540	16

S2H22 to S2H53

Features

Casing: Close grained cast iron. Ribbed for strength.

Head-plates: Close grained cast iron. Machined for accurate bearing location and impeller alignment.

Rotors: Cast iron with pressed-in steel shafts.

Gears: Ground and hardened alloy steel spur gears.

Bearings: Anti-friction bearings, retained at gear end to allow accurate setting of gear end clearance between head-plate and impellers.

Lubrication: Oil splash lubricated at gear end. Grease lubricated at drive end.

Seals: Single lip seals for air blowers and exhausters. For gas boosting, special seals are used.

Motor start: Direct on-line preferred. Star Delta starting possible providing that the machine is unloaded on start-up.

Design

Part	European Designation	ASTM
Blower Body	EN GJL 200	A 48 gr 30 B
End covers	EN GJL 200	A 48 gr 30 B
Rotors	EN GJL 200	A 48 gr 30 B
Shafts	EN 10083-1-91/50CR V4	
Gears	CARBON STEEL 817 M 40	

S2H62 to S2H84

Features

Casing: Close-grained cast iron. Ribbed for strength.

Head-plates: Close-grained cast iron. Machined for accurate bearing location and impeller alignment.

Rotors & Shafts: Integral Ductile iron.

Gears: Ground and hardened alloy steel helical gears. Durable grip rings fasten gears to shaft and allow for quick and easy disassembly and re-timing.

Bearings: Large double-row anti friction spherical roller bearings, retained at gear end to allow accurate setting of gear end clearance between head-plate and impellers.

Lubrication: Oil splash lubrication at both drive and non-drive ends.

Seals: Lip seals and piston rings with intermediate venting chamber. For gas boosting, special seals are used.

Motor start: Direct on-line preferred. Star Delta starting possible provided that the machine is unloaded on start-up.

Design

Part	European Designation	ASTM
Blower Body	EN GJL 200	A 48 gr 30 B
End covers	EN GJL 200	A 48 gr 30 B
Rotors	EN GJS 400-15	A 5 36-60-40-18
Shafts	EN GJS 400-15	A 5 36-60-40-18
Gears	CARBON STEEL 817 M 40	

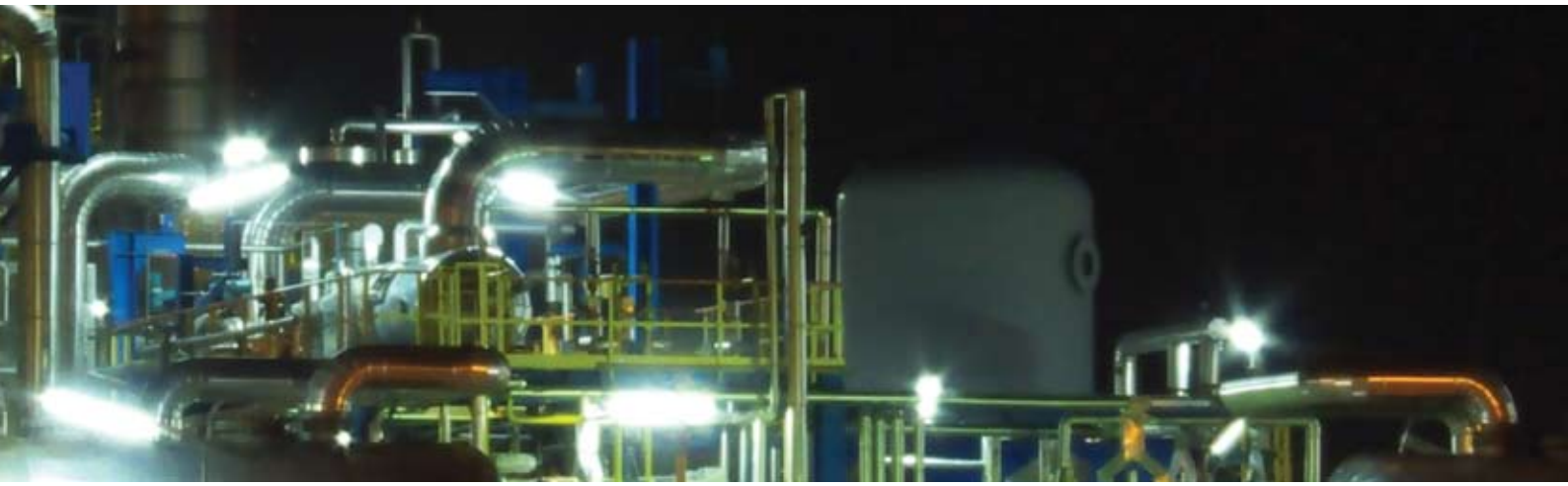

Dimensions

S2H22 to S2H53

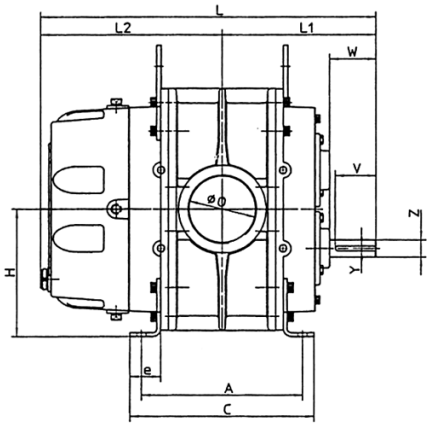

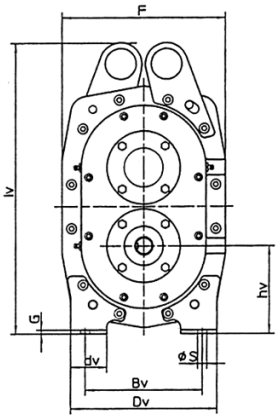

Blower Size	A	Bv	Bh	C	Dv	Dh	dv	dh	E	e	F	G	H
S2H22N	101	75	102	127	130	140	45	40	35	31.5	152	4	124
S2H23N	152	75	102	178	130	140	45	40	35	31.5	152	4	124
S2H31N	134	128	146	170	165	184	45	54	44.5	40.5	194	4	159
S2H32N	156	128	146	192	165	184	45	54	44.5	40.5	194	4	159
S2H33N	223	128	146	259	165	184	45	54	44.5	40.5	194	4	159
S2H41N	153	152	152	183	190	190	47	54	51	40	212	5	165
S2H42N	210	152	152	240	190	190	47	54	51	40	212	5	165
S2H43N	273	152	152	303	190	190	47	54	51	40	212	5	165
S2H51N	178	178	178	216	230	230	57	57	63.5	46	260	6	203
S2H52N	229	178	178	267	230	230	57	57	63.5	46	260	6	203
S2H53N	330	178	178	368	230	230	57	67	63.5	57	264	6	203

NOTE: All dimensions in millimeters unless otherwise noted.

Blower Size	A	Bv	Bh	C	Dv	Dh	dv	dh	E	e	F	G	H
S2H22	4	3	4	5	5 1/8	5 1/2	1 3/4	1 9/16	1 3/8	1 1/4	6	5/32	4 7/8
S2H23	6	3	4	7	5 1/8	5 1/2	1 3/4	1 9/16	1 3/8	1 1/4	6	5/32	4 7/8
S2H31	5 1/4	5	5 3/4	6 11/16	6 1/2	7 1/4	1 3/4	2 1/8	1 3/4	1 5/8	7 5/8	5/32	6 1/4
S2H32	6 1/8	5	5 3/4	7 9/16	6 1/2	7 1/4	1 3/4	2 1/8	1 3/4	1 5/8	7 5/8	5/32	6 1/4
S2H33	8 3/4	5	5 3/4	10 1/4	6 1/2	7 1/4	1 3/4	2 1/8	1 3/4	1 5/8	7 5/8	5/32	6 1/4
S2H41	6	6	6	7 1/4	7 1/2	7 1/2	1 7/8	2 1/8	2	1 5/8	8 3/8	3/16	6 1/2
S2H42	8 1/4	6	6	9 1/2	7 1/2	7 1/2	1 7/8	2 1/8	2	1 5/8	8 3/8	3/16	6 1/2
S2H43	10 3/4	6	6	11 15/16	7 1/2	7 1/2	1 7/8	2 1/8	2	1 5/8	8 3/8	3/16	6 1/2
S2H51	7	7	7	8 1/2	9	9	2 1/4	2 1/4	2 1/2	1 13/16	10 1/4	1/4	8
S2H52	9	7	7	10 1/2	9	9	2 1/4	2 1/4	2 1/2	1 13/16	10 1/4	1/4	8
S2H53	13	7	7	14 1/2	9	9	2 1/4	2 5/8	2 1/2	2 1/4	10 3/8	1/4	8

NOTE: All dimensions in inches unless otherwise noted. Imperial measurements are approximations based on the metric dimensions.

Dimensions (continued)

S2H22 to S2H53

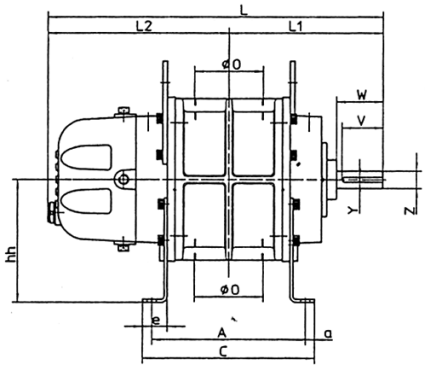

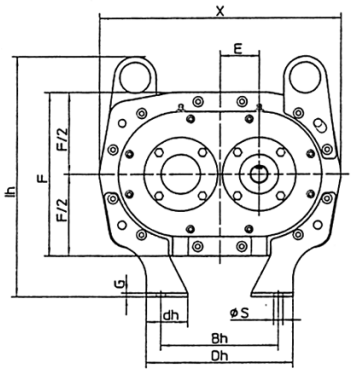

Blower Size	hv	hh	lv	lh	L	L1	L2	O BSP (in.)	S dia.	V	W	X	Y (in.)	Z (in.)	Weight (kg)
S2H22N	89	95	280	216	260	113	147	1 1/4	10	34	38	222	3/16	5/8	19
S2H23N	89	95	280	216	311	139	172	2	10	34	38	222	3/16	5/8	21
S2H31N	114	127	335	264	314	146	168	1 1/2	10	54	60	283	3/16	5/8	34
S2H32N	114	127	335	264	336	157	179	2	10	54	60	283	3/16	3/4	38
S2H33N	114	127	335	264	402	190	212	3	10	54	60	283	3/16	3/4	48
S2H41N	114	159	379	312	380	173	207	2	12	54	61	313	1/4	7/8	50
S2H42N	114	159	379	312	437	202	235	3	12	54	61	313	1/4	7/8	60
S2H43N	114	159	379	312	501	234	267	4	12	54	61	313	1/4	7/8	73
S2H51N	139.5	178	465	368	479	196	283	2 1/2	12	54	60	387	5/16	1 1/8	95
S2H52N	139.5	178	465	368	530	222	308	4	12	54	60	387	5/16	1 1/8	102
S2H53N	140	178	465	368	649	302	347	4	13	54	60	387	5/16	1 1/8	121

NOTE: All dimensions in millimeters unless otherwise noted.

Blower Size	hv	hh	lv	lh	L	L1	L2	O BSP (in.)	S dia.	V	W	X	Y in.	Z in.	Weight (lb.)
S2H22	3 1/2	3 3/4	11	8 1/2	10 1/4	4 1/2	5 3/4	1 1/4	3/8	1 5/16	1 1/2	8 3/4	3/16	5/8	42
S2H23	3 1/2	3 3/4	11	8 1/2	12 1/4	5 1/2	6 3/4	2	3/8	1 5/16	1 1/2	8 3/4	3/16	5/8	46
S2H31	4 1/2	5	13 3/16	10 3/8	12 3/8	5 3/4	6 5/8	1 1/2	3/8	2 1/8	2 9/25	11 1/8	3/16	3/4	75
S2H32	4 1/2	5	13 3/16	10 3/8	13 1/4	6 3/16	7	2	3/8	2 1/8	2 9/25	11 1/8	3/16	3/4	84
S2H33	4 1/2	5	13 3/16	10 3/8	15 7/8	7 1/2	8 3/8	3	3/8	2 1/8	2 9/25	11 1/8	3/16	3/4	106
S2H41	4 1/2	6 1/4	15	12 1/4	15	6 13/16	8 1/8	2	1/2	2 1/8	2 2/5	12 5/16	1/4	7/8	110
S2H42	4 1/2	6 1/4	15	12 1/4	17 3/16	8	9 1/4	3	1/2	2 1/8	2 2/5	12 5/16	1/4	7/8	132
S2H43	4 1/2	6 1/4	15	12 1/4	19 3/4	9 1/4	10 1/2	4	1/2	2 1/8	2 2/5	12 5/16	1/4	7/8	161
S2H51	5 1/2	7	18 5/16	14 1/2	18 7/8	7 3/4	11 1/8	2 1/2	1/2	2 1/8	2 9/25	15 1/4	5/16	1 1/8	209
S2H52	5 1/2	7	18 5/16	14 1/2	20 7/8	8 3/4	12 1/8	4	1/2	2 1/8	2 9/25	15 1/4	5/16	1 1/8	225
S2H53	5 1/2	7	18 5/16	14 1/2	25 1/2	11 7/8	13 11/16	4	1/2	2 1/8	2 9/25	15 1/4	5/16	1 1/8	267

NOTE: All dimensions in inches unless otherwise noted. Imperial measurements are approximations based on the metric dimensions.

Dimensions

S2H62 to S2H84

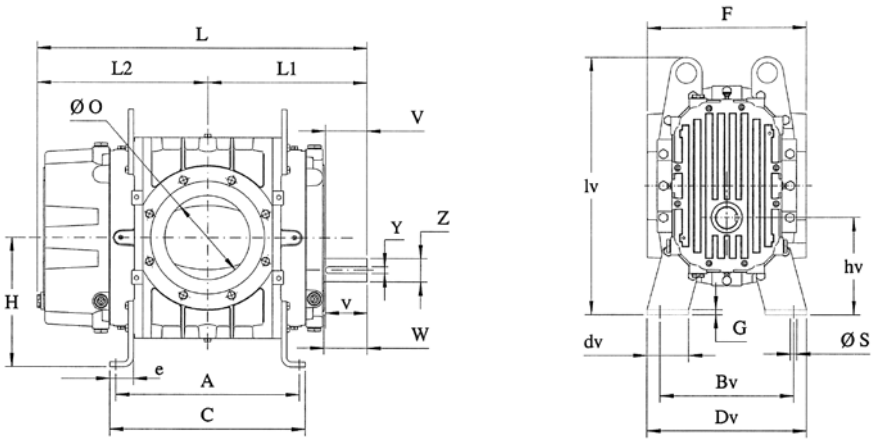

Blower Size	A	a	Bv	Bh	C	Dv	Dh	dv	dh	E	e	F	G
S2H62	351	19	290	348	471	376	528	90	90	76.2	60	400	12
S2H63	586	18	290	442	624	376	528	90	90	76.2	60	400	12
S2H64	738	18	290	442	774	376	529	90	90	76.2	60	60	12
S2H82	464.4	24	290	442	604	480	683	110	110	101.6	70	480	12
S2H83	762	24	360	563	820	480	684	110	110	101.6	70	480	12
S2H84	962	24	360	563	1011	480	684	110	110	101.6	70	480	12

NOTE: All dimensions in millimeters unless otherwise noted.

Blower Size	A	a	Bv	Bh	C	Dv	Dh	dv	dh	E	e	F	G
S2H62	13 13/16	3/4	11 7/16	13 11/16	18 1/2	14 13/16	20 13/16	3 1/2	3 1/2	3	2 3/8	15 3/4	1/2
S2H63	23 1/16	3/4	11 7/16	17 7/16	24 1/2	14 13/16	20 13/16	3 1/2	3 1/2	3	2 3/8	15 3/4	1/2
S2H64	29 1/16	3/4	11 7/16	17 7/16	30 1/2	14 13/16	20 13/16	3 1/2	3 1/2	3	2 3/8	2 3/8	1/2
S2H82	18 1/4	15/16	11 7/16	17 7/16	23 3/4	18 7/8	26 15/16	4 5/16	4 5/16	4	2 3/4	18 7/8	1/2
S2H83	30	15/16	14 3/16	22 3/16	32 1/4	18 7/8	26 15/16	4 5/16	4 5/16	4	2 3/4	18 7/8	1/2
S2H84	37 7/8	15/16	14 3/16	22 3/16	39 13/16	18 7/8	26 15/16	4 5/16	4 5/16	4	2 3/4	18 7/8	1/2

NOTE: All dimensions in inches unless otherwise noted. Imperial measurements are approximations based on the metric dimensions.

Dimensions (continued)

S2H62 to S2H84

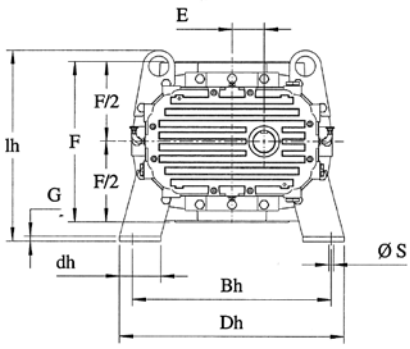

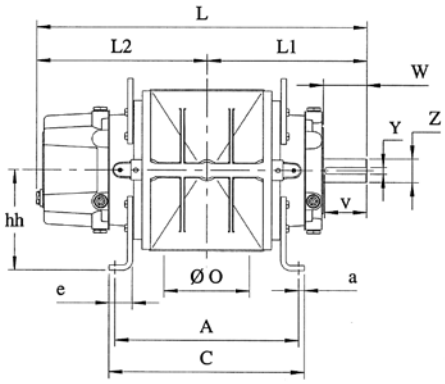

Blower Size	H	hv	hh	lv	lh	L	L1	L2	O (mm)	S dia.	V	W	Y (mm)	Z (mm)	Weight (kg)
S2H62	306.2	230	230	589	435	765	377	377	200	16	104	100	16	55	261
S2H63	306.2	230	230	589	589	927	454	454	200	16	100	104	16	55	320
S2H64	306.2	230	230	589	435	1080	530	530	250	16	100	104	16	55	470
S2H82	419.6	318	318	778	575	1021	515	515	250	20	166	165	20	75	550
S2H83	419.6	318	318	778	575	1235	618	618	300	20	165	165	20	75	665
S2H84	419.6	318	318	778	575	1438	719	719	300	20	165	165	20	75	970

NOTE: All dimensions in millimeters unless otherwise noted.

Blower Size	H	hv	hh	lv	lh	L	L1	L2	O (mm)	S dia.	V	W	Y (mm)	Z (mm)	Weight (lb.)
S2H62	12 1/16	9 1/16	9 1/16	23 3/16	17 1/8	30 1/8	14 13/16	14 13/16	200	5/8	4 1/16	3 15/16	16	55	575
S2H63	12 1/16	9 1/16	9 1/16	23 3/16	23 3/16	36 1/2	17 7/8	17 7/8	200	5/8	3 15/16	4 1/16	16	55	705
S2H64	12 1/16	9 1/16	9 1/16	23 3/16	17 1/8	42 1/2	20 7/8	20 7/8	250	5/8	3 15/16	4 1/16	16	55	1036
S2H82	16 1/2	12 1/2	12 1/2	30 5/8	22 5/8	40 3/16	22 1/4	20 1/4	250	3/4	6 1/2	6 1/2	20	75	1213
S2H83	16 1/2	12 1/2	12 1/2	30 5/8	22 5/8	48 5/8	24 5/16	24 5/16	300	3/4	6 1/2	6 1/2	20	75	1466
S2H84	16 1/2	12 1/2	12 1/2	30 5/8	22 5/8	56 5/8	28 5/16	28 5/16	300	3/4	6 1/2	6 1/2	20	75	2138

NOTE: All dimensions in inches unless otherwise noted. Imperial measurements are approximations based on the metric dimensions.

Part Descriptions

S2H22 to S2H52 / S2H22N to S2H53N

1. Gear cover
2. Oil filler plug
3&9 Inlet/outlet
4. Body casting
5. Bearing greasing points
6. Drive shaft
7. Bearing cover
8. Mounting feet
10. Oil drain feet
11. Oil level sight-glass
12. External vent filter
13. Gear cover vent port

A = Gear vent configuration

B = Alternative gear cover vent configuration

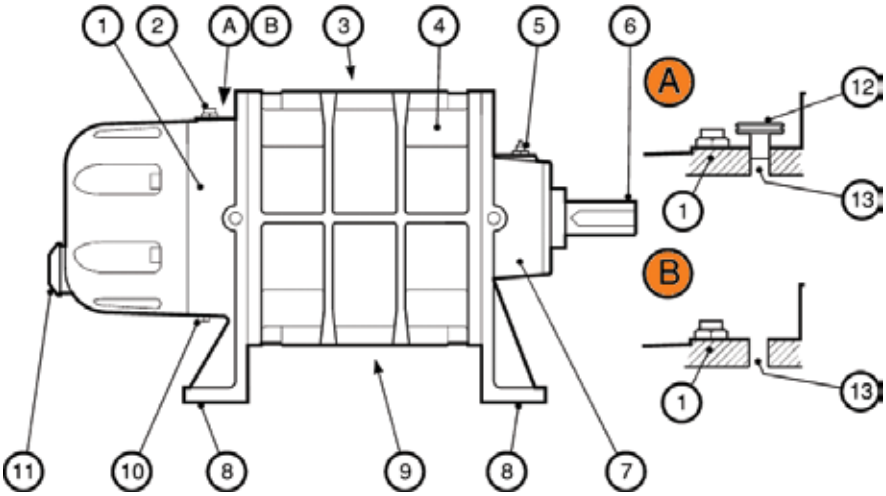

S2H63 to S2H84 / S2H63N to S2H84N

1. Gear end cover
2. Oil filler plug (gear end)
3. Lifting brackets
4&11 Inlet/Outlet
5. Oil filler plug (drive end)
6. Drive end cover
7. Drive shaft
8. Oil level sight-glass (drive end)
9. Oil drain plug (drive end)
10. Mounting feet
12. Oil drain plug (gear end)
13. Oil level sight-glass (drive end)
14. Vent filter
15. Gear end/drive end vent

A = Gear end cover/drive end cover vent filters

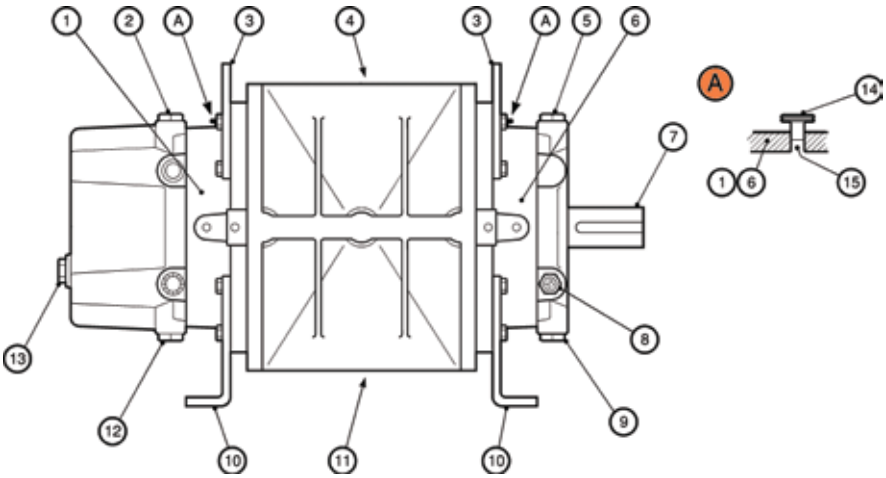

All service work and repairs conform to the highest industrial standards and are completed by a team of experienced technicians and engineers. Ingersoll Rand embraces its duty to operate in a manner that protects the environment and human health and safety in order to support the company's long-term growth and reputation as a responsible corporation.

SERVICE AND PARTS

Ensure long-term, reliable operation

- Global network of Certified Service Professionals
- Full on-site service packages available, including:
  - > Installation
  - > Commissioning
  - > Diagnostic
  - > Preventative maintenance
- Extensive spare parts inventory
- Operational and maintenance training programs

STANDARD EXCHANGE PROGRAM

Factory Refurbished Machines

- Large range of refurbished machines in stock
- Certified performance
- 12-month warranty

PROFESSIONAL SALES & ENGINEERING SERVICES

We bring our expertise to you

- More than a century of technical and industrial experience
- Global network of sales and application support personnel
- OEM customized drawings, manuals and documentation

Ingersoll Rand
Industrial Technologies

Ingersoll Rand Industrial Technologies provides products, services and solutions that enhance our customers' energy efficiency, productivity and operations. Our diverse and innovative products range from complete compressed air systems, tools and pumps to material and fluid handling systems and environmentally friendly microturbines. We also enhance productivity through solutions created by Club Car®, the global leader in golf and utility vehicles for businesses and individuals.

www.ingersollrand.com
www.hibon.com

Low Pressure Business Unit / Air Solutions
Ingersoll Rand Industrial Technologies
2, avenue Jean Paul Sartre
59290 Wasquehal
France

Tel: (33) 03 20 45 39 39
Fax: (33) 03 220 45 39 37

Low Pressure Business Unit / Air Solutions
Ingersoll Rand Industrial Technologies
12055, Cote de Liesse
Dorval, Quebec
Canada, H9P 1B4

Tel: (514) 631-3501
Fax: (514) 631-3502

*** Consult www.hibon.com for further contact information.**

Ingersoll Rand compressors are not designed, intended or approved for breathing air applications. Ingersoll Rand does not approve specialized equipment for breathing air application sand assumes no responsibility or liability for compressors used for breathing air service.

Nothing contained on these pages is intended to extend any warranty or representation, expressed or implied, regarding the product described herein. Any such warranties or other terms and conditions of sale of products shall be in accordance with Ingersoll Rand's standard terms and conditions of sale for such products, which are available upon request.

Product improvement is a continuing goal at Ingersoll Rand. Designs and specifications are subject to change without notice or obligation.

©2007 Ingersoll Rand Company CCN-38451050